SkyWideSystems

Emergency Parachute System

PILOT BACK SQUARE

Technical Description and Owner's Manual

Kyiv, Ukraine

Contents

MANUAL REVISION HISTORY

Revision	Date	Author	Description
01	28-09-2018	Oleksiy Sharadkin, company owner	The initial issue
02	16-12-2018	Oopee Luomajoki, FAA Master Parachute Rigger	Details in text refined

WARNING

!!! Warning – Disclaimer !!!

Because of the unavoidable danger associated with the parachuting activities and the use of parachute equipment, SkyWideSystems (SWS) company makes no warranties either expressed or implied.

This rig is sold as it is with all faults and without any warranty of safety. The manufacturer (SkyWideSystems company) also disclaims any liability for injuries resulting from a malfunction or from a defect in design, material, workmanship or manufacturing.

By using this rig, or allowing it to be used by others, the buyer waives any liability for personal injuries or other damages arising from such use.

If the buyer declines to wave the liability on the part of the manufacturer, buyer may obtain the full refund the purchase price by returning the parachute harness and container, before it is used, to the manufacturer within 30 days from the date of original purchase with a letter stating why it was returned.

In case if you started operating the rig, or did not return it within 30 days from the date of purchase – you assume risk and wave any claims against the manufacturer.

!!! The user assumes the risk !!!

The deployment of the emergency parachute system Pilot Back Square at the airspeed exceeding the maximum speed limit, or at the position unlike “horizontal, face down” may result in the following consequences:

- extremely hard deployment with gear damage
- the eventual falling out of harness
- harness destruction
- canopy damage or malfunction
- injury or death of the parachutist

!!! Do not violate the manual requirements !!!

Be aware and follow the parachute equipment related guidelines and regulations.
Use only equipment that have been assembled from original components in strict accordance with the manual by a skilled parachute rigger.
Replace damaged, worn out or obsolete components and equipment.
Never exceed the maximum weight or speed approved to your rig as well as the other requirements of the manual.

!!! You and only you are responsible for your life !!!

MANUAL INFORMATION

Pilot Back Square emergency parachute system consists of the Pilot harness-container system equipped with a seven-cell reserve square canopy.

This manual is written to make the user and rigger aware of the performance and operation features and to learn the

- construction and operation
- inspection, assembly and packing
- appropriate use
- transportation and storage

of the Pilot Back Square Emergency parachute system.

The manual does not substitute a parachuting training course for the owner/user and shall only be used for an assistance in training and control.

The manual does not substitute the emergency parachute packing training course for a rigger and shall only be used as a source of information about the details of the parachute system packing.

Assembling, inspecting and packing the parachute system strictly in accordance with the instructions and recommendations of the manufacturer is the responsibility of each skilled and qualified rigger.

The owner of the parachute system is responsible for meeting the manufacturer’s requirements concerning the technical inspection and packing terms, exit weight and airspeed in order to secure oneself and other people.

This manual is a compact source of information for you and your rigger. Please save this manual as your rigger will need it while inspection and packing.

1 PRODUCT INFORMATION

1 GENERAL

Emergency parachute system Pilot Back Square is a personal safety device for an emergency parachute jump.

1.1 Pilot Back Square emergency parachute system

Picture 1. Emergency parachute system Pilot Back Square

1.2 Technical Data

Parachute, surface area	120 to 300 sq. f
Horizontal speed	8 - 12 m/s
Descent rate	3-4 m/s, short-term – to 0 m/s
Harness webbing	MIL-W-4088 Type 7
Overall weight of the system	up to 8 kg
Range of adjustment	from: height 150 cm, weight 50 kg to: height 210 cm, weight 135 kg
Maximum take-off weight	up to 136 kg
Maximum airspeed	309 km/h
Deployment method	manual
Minimum exit altitude	100 m
Warranty	12 months for manufacturing defect. Warranty does not cover ordinary wear, mechanic damage and defects, resulted from improper operation and/or storage.

1.3 System Components

Picture 2. System components

1. harness and container system
2. canopy deployment bag (free bag) and bridle*
3. pilot chute*
4. 2-pin deployment handle*
5. two closing loops**
6. Cypres Washer – 2 pcs.
7. staging loop
8. packing data card

*** Warning!** replacing the indicated elements may effect on safety in a critical way. You are allowed to use the original parts only. Use of any other components is ***strictly prohibited***.

** Use only 2,3 mm thick Microline CYPRES cord. Use of any other material as a closing loop is ***stricktly prohibited***.

2 ASSEMBLY AND PACKING

2.1. Packing Preparations

2.1.1. Assembly of the seven cell reserve canopy

WARNING! Check the line continuation before attaching any line to a riser!

Picture 3. Parachute Assembly

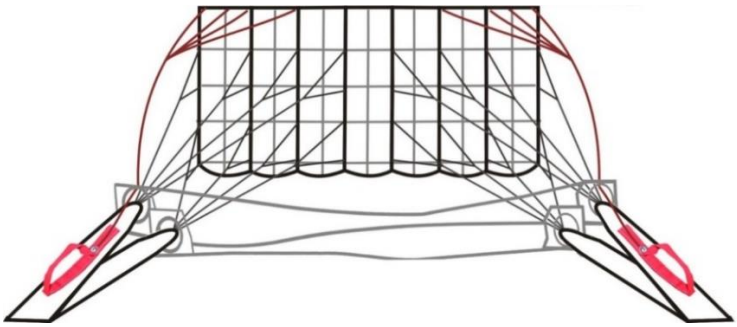

Attach the canopy to the risers of the emergency parachute system following the canopy manufacturer's instructions.

2.1.2 Assembly by using Rapide Links

Picture 4a. Attaching the Metal Links

1. Screw the connectors by fingers until tight.
2. Tension the barrel 1/4 turn with a wrench. Place the larger side of the link towards riser and lines to the smaller side.
3. Install a bumper to protect the link, lines and slider grommet.
4. Secure the bumper by handtacking.

2.1.3 Assembly by using Soft Links

Picture 4b. Attacing the Soft Links

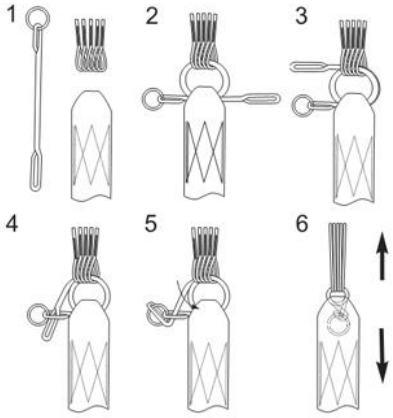

Assemble the soft links in accordance with the soft link manufacturer’s instruction.

Handtack the ring (tab) to the riser with super tack to prevent shifting.

Picture 5. Tack a tab to the riser

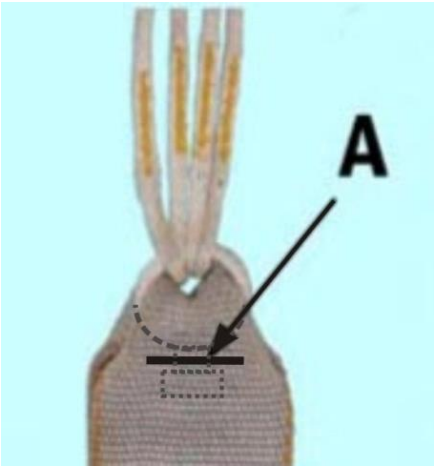

A Shows the place of the handtack

2.2. Installing Toggles to Steering Lines

The toggles come with the container and they are compatible with the risers of the emergency parachute system.

Follow the canopy manufacturer's manual when installing the toggles to steering lines. The manual contains important information relevant to this particular canopy make. It's highly important to adjust the toggle line using the manufacturer markings on the line if there are not ready loops available. If the toggles are mounted too far down the steering lines, the canopy may be less responsive and if the toggles are mounted too high up, the canopy may suddenly stall on landing.

Make sure that steering lines are correctly routed (i.e. they clear from any suspension lines).
Make sure that steering lines pass through the rear slider grommets and the guide rings on the risers.

Picture 6a. Installing the Steering Toggles

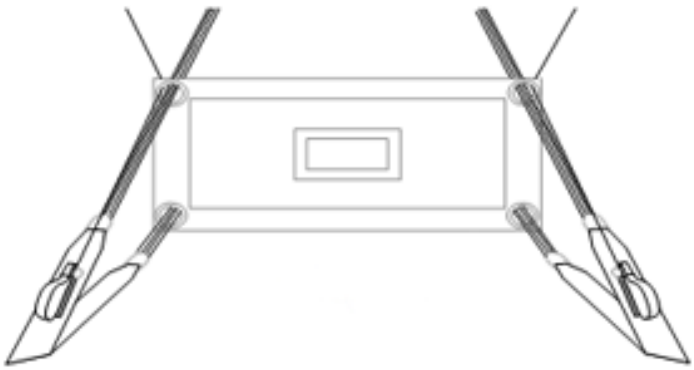

Locate the mark on the steering line that indicates the correct toggle location. Verify that both steering lines are symmetrically marked in the same way. If you find difficult to find the correct location of this mark, refer to the canopy owner's manual.

Picture 6 b. Attaching the Steering Toggles

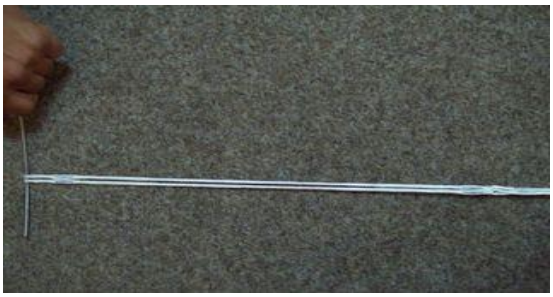

In order to attach the toggles to the steering lines thread the loop of the line through the toggle grommet.

Thread the toggle loop through the steering line loop. Then straighten and tighten the steering line loop. Repeat these steps for the other toggle.

Picture 6 c. Attaching the Steering Toggles

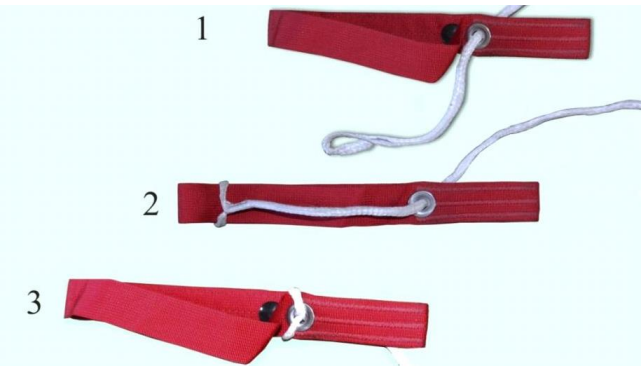

2.3. Attaching the Closing Loop

The closing loop is made of Microline Cypres Cord 2,3 mm thick. The size of the "eye" is 1,5-2 cm. The use of any other material with any other size is strictly prohibited.

Make two closing loops for the emergency parachute system. Closing loop has 25-90 mm A length, depending on the size of the rig. The indicated measures are valid for pre-stretched loops.

Picture 7a. Closing Loop

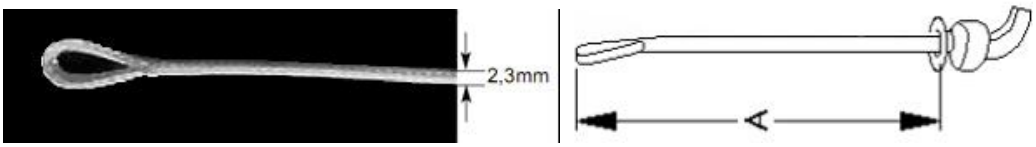

Take a loop and a Cypres washer. Mark the proper length of the loop + 20mm (it takes 20 mm to attach the loop to the washer).
Tie a double knot on the mark and secure with a single knot as shown below.

Thread the loop through the holes on the washer as shown.

Picture 7b. Tying the closing loop to Cypres washer

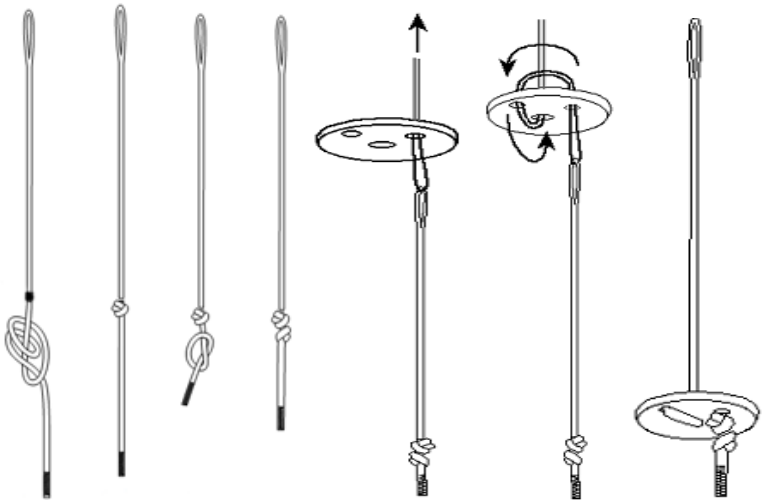

Remove the thread and place a smooth metalbar in the loop and pre-stretch as shown. Inspect the length of the loop.

Picture 7c. Pre-stretching the closing loop

If you use self-made loops, lubricate 5 cm from the end of the loop with silicon (a silicon pad comes with Cypres Packer's Kit).

Picture 7 d. Lubricating the closing loop

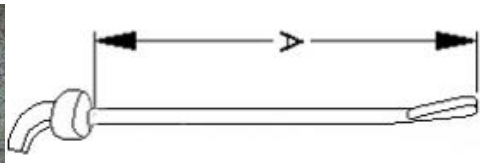

Measure the provided staging loop to be 2,5 cm shorter than the closing loop.
Tie a double knot on the mark. Secure with a single knot.

Feed the closing loop of the upper flaps in the upper anchor grommet (underneath the elastic cover) and thread it through the grommet in the center of the upper anchor.
Feed both closing and staging loops loop in the grommet of the lower anchor (underneath the elastic cover) and thread it through the grommet in the center of the lower anchor.
THIS WOULD NEED A PICTURE TO SHOW HOW TO DO IT

2.4. Installing the Ripcord Handle

Take the ripcord handle and inspect it. Insert the ripcord cable into housing and place the handle into pocket.

Picture 8. Ripcord Handle

3. PARACHUTE PACKING INSTRUCTIONS

3.1. Technical Inspection

Technical inspection is required to becarried out:

- When assembling the parachute system
- Before each packing the parachute system (regardless whether it was used or not)
- After using the parachute system in unusual conditions (such as landing in water)
- At regular times, every 6 months or following the regulations of the country where the equipment is used

The inspection may be carried out by an appropriately certified parachute rigger (or equivalent). Read the manual carefully before the inspection.

Object	Priority
Harness	Damaged edges, frayed webbing, broken stitches, condition of elastic bands
Ripcord: handle, pocket, cable and housing, ripcord pins	Handle pocket, cable damage, pins distortion, enough slack in cable, Velcro, broken stitches, damaged housing and its attachments
Container flaps	Damaged stiffeners, bent or damaged grommets, sharp and burred edges, improper installation
Risers	Damages: bent connectors, brake and toggle attachments, slack of steering lines
Pilot chute, bridle and deployment bag	Damages: grommets, Velcro, safety stow, bridle, pilot chute fabric, pilot chute spring, pilot chute attachment to bridle
Hardware	Rust, burrs, sharp edges, proper installation
Closing loops	Condition, fabric, proper length

3.2. Packing Tools

The following is a list of recommended tools you may need:

- weight bag (4 pcs.)
- packing paddle (2 pcs.)
- positive leverage device
- adjustable wrench
- ruler, scale interval - 1 mm
- temporary pin (3 pcs.)
- pull-up cord (5 pcs.)
- thread thru rod
- owner’s manual
- packing plate with Y-shaped cut (preferably square)
- silicon pad (Cypres Packer’s Kit)
- packing data card, rigger logbook, pen
- seals, seal press, seal thread, stickers, tape, scissors, date stamp, rigger stamp
- super tack cord, needle

Picture 9. Packing Tools

Recommendation:
Count your tools before and after the packjob.

3.3. Setting the Brakes

Make sure that parachute and toggles have been properly attached.

Picture 10 a. Setting the Brakes

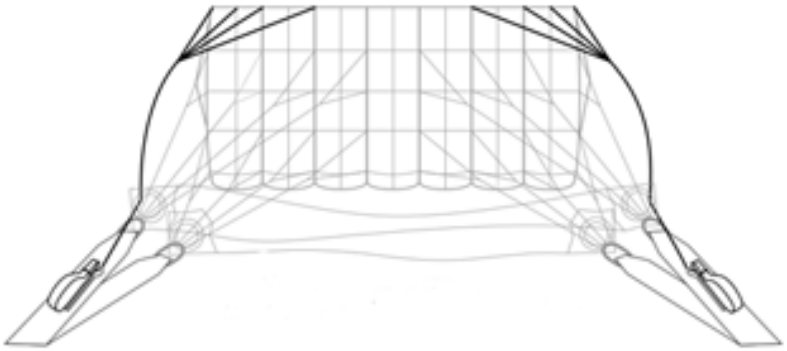

Set the brake and place the excessive line to the outside.

Picture 10b. Setting the Brakes

Fold the excess line 2-4 times (depending on the length) and insert it accurately into the elastic keeper.

Picture 10 c. Setting the Brakes

3.4. Placing the Canopy Into the Deployment Bag (Free Bag)

Get the D-bag ready to the packing. Unzip fasteners at the sides of the D-bag (1), thread the pull-up cords through upper (2) and lower (3) grommets.

Picture 11. Free Bag

Flake the canopy following the manufacturer's instructions. SWS recommends Pro-Pack method, because this method achieves an optimal bulk distribution for the deployment bag and container.

After flaking the canopy should look as shown in the picture.

Picture 12 a. Flaking the Canopy

Make the first S-fold to match the distance between freebag edge and lower grommet. We recommend that you use packing paddles to achieve smoother and more accurate packjob. Separate the slider grommets away from the center and leave 10 cm between them.

Picture 12 b. Flaking the Canopy

The edge of the slider has to be approximately 5 cm higher than the edge of the S-fold.

Picture 12 c. Flaking the Canopy

Release the last S-fold of the trailing edge and pull it down over the slider grommets as shown.

Wrap the trailing edge around the cocooned canopy leaving only the nose outside.

Fold the nose in two and place it under the cocoon.

Picture 12 d. Flaking the Canopy

The width of the cocooned canopy should be the same or slightly wider than the mouth of the freebag.

Picture 12 e. Flaking the Canopy

Gather the short section of the center cell to form the molar shape and carefully slide the bag under the canopy.

Picture 13 a. Placing the Canopy into the Free Bag

Carefully slide the freebag over the canopy, pushing each “ear” into the top corners of the bag, filling the corners evenly and leaving a tapered shape.
Zip up the sides of the freebag.

Lock the freebag with two bites of suspension line. Expose the line stow pouch.

Picture 13 b. Placing the Canopy Into the Free Bag

Stow lines into the rubber bands. Close the pouch.

Picture 13 c. Placing the Canopy into the Free Bag

3.5. Placing the Free Bag into the Container

Spread out the container flaps. Pass the pull-up cords to the closing loops and the additional (staging) elastic loop.

Fan the connector links rather than stack them on each other, placing the rear connector links to the outside. Be sure to place the risers far enough in the pack tray.

Pass the pull-up cords through the freebag grommets.

Place the bagged canopy on the pack tray. Keep freebag and closing loops grommets in line.

Picture 14. Placing the Free Bag into the Container

3.6. Closing the Container

Close the lower flap. Pull the closing loop through the lower flap grommets.
Pull the closing loop through the center grommet (1) and secure it with temporary pin.
Pull the additional (staging) elastic loop through the off-center grommet (2) and secure it with temporary pin.

Picture 15 a. Closing the Container

Fold the top portion (1 m) of the bridle over the freebag and stack it at the lower flap as shown. Tri-fold the bridle lengthwise. Fold and tuck bridle 1,5 cm into staging loop (1), then remove the pull-up cord.

Picture 15 b. Closing the Container

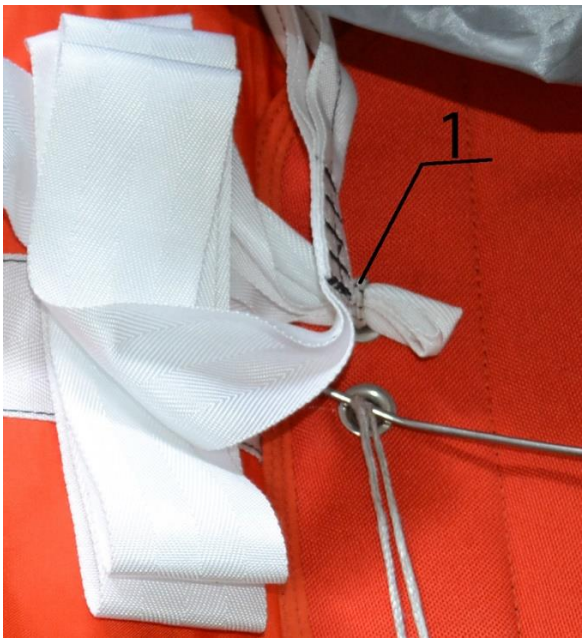

Fold the rest of the bridle in the V-shape pattern.

Picture 15 c. Closing the Container

Insert the thread-through rod in the pilot chute. Make sure that the rod does not interfere with the spring coils and goes straight through the center of the spring.
Insert the upper pull-up cord in the rod and pull the pull-up cord on the top of the pilot chute.

Place the pilot chute spring top of the upper freebag grommet with the grommet accurately in the center.
Make sure the pilot chute is centered over the loop, then compress it straight down and lock it with the temporary pin.

Pull all the pilot chute fabric out, away from the spring.

Picture 15 d. Closing the Container

After pulling the fabric away from the spring, check to make sure the pilot chute base is centered under the top plate after which accordion fold the material.

Picture 15 e. Closing the Container

Insert the pull-up cord in the upper flap grommet. Cover the pilot chute top plate with the upper flap. The grommets of the upper flap and pilot chute top plate must be in line.

Using the packing plate with Y-shaped cut and positive leverage device pull up the closing loop and secure it with the temporary pin.

Picture 15 f. Closing the Container

Close right side flap of the container. Secure the closing loops with the temporary pins.

Picture 15 g. Closing the Container

Perform the same procedure for the left side flap.
After securing all the flaps of container extract the temporary pins and close the container with the ripcord pins.
Seal the lower ripcord pin. Close the protective flap.

Picture 15 h. Closing the Container

After the packing count your tools and fill the packing data card!

3.7. Equipment Adjustment and Donning

Put the rig on and thread your feet through the leg straps. Make sure the straps are not twisted.

Thread the chest strap into the friction adapter; make sure that it's not twisted.

Tighten the chest strap so that it is snug, but not over tight to bend the Main Lift Webbing inside. After tightening stow the excess strap in the elastic keeper.

Tighten your leg straps (simultaneously) until they are snug, make sure both straps are evenly tightened. Uneven tightening of the leg straps may seriously affect the emergency parachute opening and flight.

After tightening stow the excess strap in the elastic keepers.

Properly adjusted and donned harness is not loose – nor does it restrict normal movement.

3.8. Opening the Parachute

To deploy the emergency parachute, look at the handle, take a firm grip with your thumb inside the handle and fingers around the handle. Take the handle out of the pocket with turning motion to break the velcro and pull the ripcord along the housing (downwards) with the entire length of your arm.

It is extremely important to take a proper grip on the ripcord before the pull. If the grip is not good, the handle may slip from your hand.

4. MAINTENANCE AND CARE

4.1. Repack Cycle

When cared properly the emergency canopies repack cycles are authorized for one year (12 months).
Proper care includes keeping the entire system clean, dry, limited exposure to UV light, not overheating, and no exposure to degrading substances.
You must use the shortest repack cycle according to your country's regulations and canopy manufacturer's requirements.

4.2. Service Life

There is no set service life for Pilot Back Square emergency parachute. It can be in service as long as it has been deemed airworthy by the rigger. However, the rigger/owner must must follow his country's regulations in terms of maximum service life of emergency parachutes.

4.3. Periodical Inspection

Performing a periodic inspection and maintenance are essential for safe and long-lasting operation of your rig.
Usually the parachute system requires very little maintenance unless it is subjected to abnormal or harsh conditions. Remember, you trust your life to the parachute equipment you have chosen. It is your responsibility to ensure that equipment remains in optimum serviceable condition.

The best approach to rig maintenance is to spend a few minutes performing a periodic, detailed inspection of the rig. The inspection should be performed by the owner at least once a month. Obviously, the more you use your equipment, the more often you should inspect it. If any wear or damage is found, contact your rigger and have it repaired wirhout delay. If you have any suspicions or questions, do not hesitate to call and ask a rigger or the manufacturer for advice.

Periodic inspection should cover all parts of the harness and container system while paying particularly close attention to following areas:

Harness. Inspected all webbing for broken stitching or fraying.

Container. Inspect the plastic stiffeners in the container flaps and have replaced if broken. Replace any grommets that are deformed, nicked, damaged, or pulled out of setting.
Inspect ripcord housing, cable as much as can be seen, handle and pins, closing loops, container fabric.

Velcro. The “hook” side of Velcro attracts bits of grass, hair and other dirt. You can clean the hook portion using a hair comb. The “loop” section generally remains clean but the nylon fibers sometimes tend to get pulled out of place. When you find that your Velcro fastener is loosing its keeping qualities, replace it.

You cannot make any improvements or repair on the parts listed above if you are not a qualified rigger. You can, however, identify smaller problems before they become big. Some items to look for would include kinks in the ripcord cable, frayed or worn closing loop, frayed stitching on the harness and container.

5. CUSTOMER SERVICE

5.1. Modification and Repair

The container is designed in a way that the rigger can repair the system in the field to the fullest extent possible. If you need a repair, please contact SWS company. We can produce all necessary parts and provide a rigger with the instructions so he can replace them easily.

5.2. Spare Parts

Much of the spare parts of the parachute system you may need are available to the immediate shipping on order. It is advicable not to use any off-brand spare parts. If you have to do that in some case, make sure they are identic by the size, manufacturing standards and material.
To order the spare parts you need a serial number and date of the manufacture. These are found on the label at the right riser.

5.3. Materials

Materials listed below are used in production:

Usage	Name	Features
	Webbings:	
Harness webbing	Type 7, MIL-W-4088	Width 43 mm Strength 2715 kg
Harness webbing	Type 8, MIL-W-4088	Width 43 mm Strength 1814 kg
Riser webbing, «narrow»	Type 17, MIL-W-4088	Width 25,4 mm Strength 1134 kg
Webbing	Type 4, MIL-W-4088	Width 76 mm Strength 816 kg
Webbing	Type 12, MIL-W-4088	Width 43 mm Strength 544 kg
	Binding and Reinforcement:	
Pilot chute reinforcement	Type III, MIL-T-5038	Width 12,7 mm Strength 114 kg
Binding tape	Type III, MIL-T-5038	Width 19 mm Strength 190 kg
Toggles reinforcement	Type IV, MIL-T-5038	Width 25,4 mm Strength 455 kg
Bridle	2” Polyester webbing	Width 50 mm Strength 795 kg
	Fabrics:	
Basic fabric of the container	Cordura	1000 den

Freebag fabric	ParaPack	420 den
Inner surface of container	ParaPack Foam Laminated	
Spacer Foam	Spacer Foam	
Stiffeners	Ballistic, MIL-C-3953	
F-111	Type IV, MIL-C-44378	
Pilot chute mesh	High Drag Netting	
Lines:		
Closing loop	Microline Cypres Cord	
Threads:		
Threads of container	VT-295E Size «E»	4 kg
Threads of harness	VT-295E Size «5»	19 kg
Hardware:		
Chest buckle, «narrow»	101	225 kg
Chest buckle, «wide»	PS70101	225 kg
Leg strap buckle, standard	PS22040-1(2)	1130 kg
Leg buckle, Flip-Flop	HSP888	1130 kg
Carabine B-12	PS22044-1(2)	1130 kg
Grommet 0, 0L SS	Grommet, stainless	0,01L
Grommet 0, 4 Nick	Grommet brass Nickel finish	0,4 L
Ripcord housings	Ripcord housings	260 I.D.
Oval sleeve	Oval sleeve	
Ripcord cable	Stainless steel aircraft cable	
Pilot chute spring	MA – 1	Length 50 cm Strength 12 kg
Additional Materials:		
Plastic stiffeners	Nylon MDS 0,06; 0,04	Thickness 1,6 mm; 1,0 mm
Foam inserts	Closed Cell Mem Foam 1\3”	Thickness 8,5 mm
Shock cord (safetystow)	1\8” Shock cord nylon covered	Thickness 3,2 mm
Elastic strap holders	1” Cotton Elastic, MIL-W-5664	Width 25,4 mm

In case if you need materials listed above for the parachute system repair and maintenance, you can order any of them at SWS company.

STORAGE

Parachute systems are manufactured primarily from nylon. Nylon is very durable, but is still can get damaged from several sources:

Sunlight. The ultraviolet radiation in sunlight weaken nylon quickly and permanently. Keep your parachute out of direct sunlight as much as possible.

Acids. Acids damage nylon. Do not spill acid on your parachute. Keep your rig away from hangar floors, close to acid batteries or similar areas where acids may be present. If such contamination does occur, immediately and thoroughly wash the rig with plenty of warm soapy water. Until a rig can be washed, baking soda will quickly neutralize most acids. If acid damage occurs or is suspected, a rigger should thoroughly inspect your rig.

Oils and Grease. Most petroleum compounds do not weaken nylon; they simply stain it. A rigger using the proper petroleum solvent should promptly remove such stains.

Water. Water will not structurally damage nylon, but prolonged agitation in fresh water weakens webbing or may cause some fabric and tape colors to bleed. Salt water may damage nylon, because when drying it creates small salt crystals inside the fibres. If the parachute has been in salty water, it must be promptly and thoroughly washed off with plenty of fresh water.
Drying the wet parachute must be done by hanging it to dry out of the direct sunlight in a well ventilated area.

Soil. Soil may damage nylon. Brush off the soil after it has dried. Be sure that the soil is not in the cable housings or ripcord pins or closing loops. Consult a rigger if your rig is heavily soiled or extremely dirty.

Sand. Fine sand will weaken and cut webbing and fabrics of all types. Prolonged exposure to sand will shorten the life of the entire parachute assembly.

Abrasion. Nylon quickly frays if dragged over concrete or other rough surfaces.

NOTICE

Information and the certifications set out in this Manual are efficient at the time of publication.

SWS company reserves the right to make changes in the emergency parachute system Pilot Back Square without additional notifications.

CONTACT INFORMATION

Postal address	p.o. box 77, 02175 Kyiv, Ukraine
Actual address of the manufacture	9 Boryspilska str., block 111, office 603 Kyiv, Ukraine
Telephone	+380 67 210-00-44
Email	order@sws.aero
www	www.sws.aero